BEVEL GEAR ACTUATORS

STANDARD TYPE-D 〉 Multiple Input Shaft

Multiple Input Shaft
Thrust & Torque Horizontal Input with Double Reduction Gear Attachment

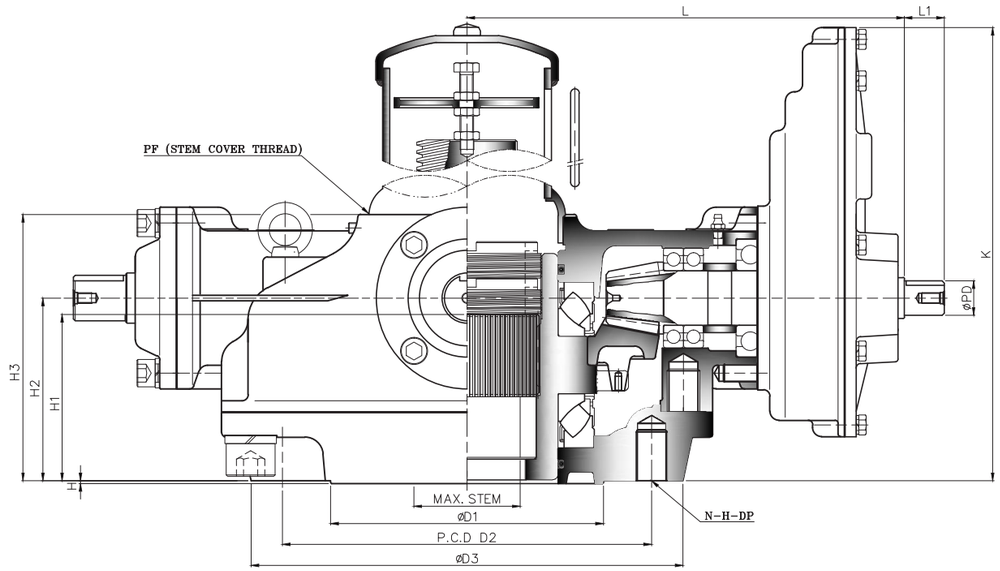

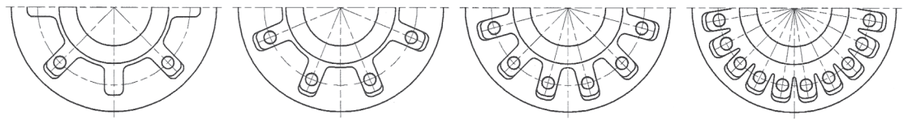

TYPE - A TYPE - B TYPE - C TYPE - D

Dimension

UNIT : mm

MODEL \ DIM	BASE PART							EXTERNAL PART					INPUT SHAFT PART			HAND WHEEL	STEM COVER
	TYPE	FLANGE SIZE	ØD1	P.C.D ØD2	P.C.D N-H-DP	ØD3	H	H1	H2	H3	K	L	L1	ØPD	KEY		
SB-V0W-1SD	A	F-14	100	140	4-M16-24	175	3	72	81	121	195	251	29	21	6X6	250	PF2-1/2"
SB-V1W-1SD		F-16	130	165	4-M20-30	210		84	98	140	212	263				300	PF3"
SB-V2W-1SD	B	(F-16) F-20	140	205	8-M16-24	250	3	95	115	160	259	266	34	26	8X7	400	PF3-1/2"
SB-V3W-1SD		F-25	200	254	8-M16-24	300		102	119	167	263	286				500	PF4"
SB-V35W-1SD		F-30	230	298	8-M20-30	350		122	138	196	333	369	34	32	10X8	630	PF5"
SB-V4W-1SD		F-35	260	356	8-M30-45	410		133	150	210	345	394					PF6"
SB-V5W-1SD		F-40	300	406	8-M36-55	475		171	182	253	370	437				710	
SB-V6W-1SD		F-40	300	406	8-M36-55	475		182	201	279	498	498	44	38	12X8	800	PF8"
SB-V7W-1SD	C	F-48	370	483	12-M36-55	560	3	208	222	316	520	532	44	38	12X8	900	PF8"
SB-V8W-1SD		F-48	370	483	12-M36-55	560		234	258	353	638	691	58	50	16X10	1000	PF10"
SB-V85W-1SD		F-48	370	483	12-M36-55	560		250	277	375	707	741	58	50	16X10	1000	PF12"
SB-V9W-1SD	D	F-60	470	603	20-M36-55	700	3	263	295	398	827	875	58	50	16X10	1000	PF12"
SB-V10W-1SD		(F-60) F-80	650	800	20-M42-63	900		315	355	480	863	941					

Dual Gear Actuator Type (Manual Dial Indicator)

Typical Arrangement for Two Spindles Application

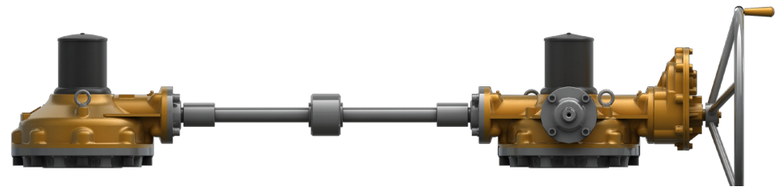

1. This type is used for large size of sluice gates and designed for manufacturing type to operate efficiently using 2 spindles.
2. Local dial position indicator provides clear indication of gate position.
3. Sambo can provide suitable interconnecting shafts and couplings if required. (Customer must state the center distance between the gate stems.)

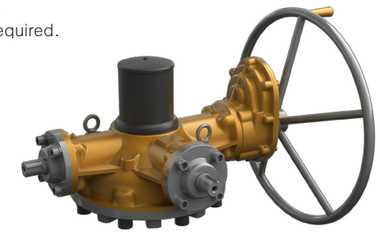

Dual Gear Actuator Type (Electric Actuators)

Typical Arrangement for Two Spindles Application

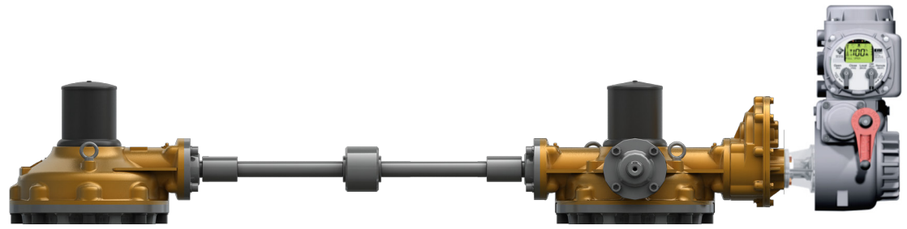

1. This type is used for large size of sluice gates and designed for manufacturing type to operate efficiently using 2 spindles.
2. Local dial position indicator provides clear indication of gate position.
3. Sambo can provide suitable interconnecting shafts and couplings if required. (Customer must state the center distance between the gate stems.)

Selection Chart for Manual Operation

MODEL \ SIZE	MAX. GEAR RATIO (Change Able)	MAX. STEM ACCEPTANCE		MOUNTING OPTION & STANDARD	MAX. THRUST CAPACITY		MAX. TORQUE CAPACITY		WEIGHT
		TW	KEY		KN	lbf	N-m	Ft . lbf	Kg
SB-V0W-1SD	13 : 1	46	38 (12X8)	F-10, F-12, F-14	127	28550	600	442	24
SB-V1W-1SD	14 : 1	55	45 (14X9)	F-14, F-16	141	31700	980	723	30
SB-V2W-1SD	25.67 : 1	62	52 (16X10)	F-14, F-16, (F-20)	190	42710	1500	1106	46
SB-V3W-1SD	32.08 : 1	72	60 (18X11)	F-16, (F-20), F-25	288	64750	2500	1844	58
SB-V35W-1SD	49.5 : 1	85	72 (20X12)	F-25, F-30	350	78680	3500	2581	101
SB-V4W-1SD	54 : 1	98	84 (22X14)	F-25, F-30, F-35	400	89920	5200	3835	122
SB-V5W-1SD	58.5 : 1	115	100 (28X16)	F-30, F-35, F-40	510	114650	7800	5753	179
SB-V6W-1SD	112 : 1	130	115 (32X18)	F-35, F-40	2310	519300	13000	9588	289
SB-V7W-1SD	120.88 : 1	150	130 (36X20)	F-40, F-48	2500	562020	17600	12981	371
SB-V8W-1SD	200 : 1	180	160 (40X22)	F-40, F-48	4100	921700	26000	19177	578
SB-V85W-1SD	200 : 1	190	170 (40X22)	F-40, F-48	5150	1157760	34000	25077	650
SB-V9W-1SD	200 : 1	200	180 (45X25)	F-48, F-60	5450	1225180	42000	30978	893
SB-V10W-1SD	200 : 1	230	200 (50X28)	F-60, (F-80)	7300	2585300	71000	52367	1051